202433
IR 15 PSOK-IBS
Inductive ring sensor

- High resolution
- Short activation time
- Sensitivity and pulse stretching adjustable
- Resistant to dirt
- Static operating principle
- Metal connector
- High protection type

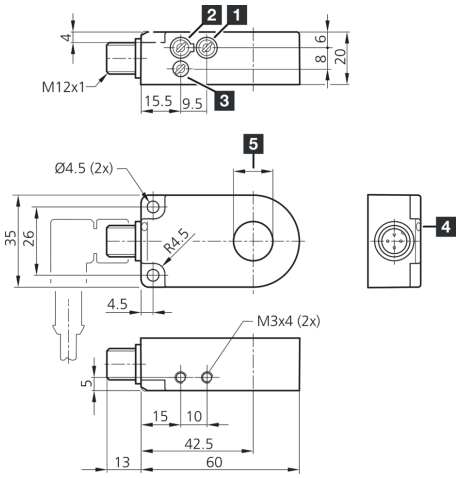

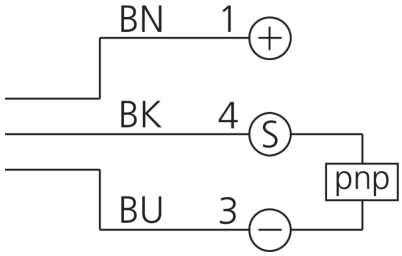

1) sensitivity
2) NO/ NC
3) Time
4) LED
5) Ring diameter

BK: black BN: brown BU: blue

Function

Technical data (typ.)	+20°C, 24 V DC
Service voltage	10 … 35 V DC (Supply Class 2)
No-load current (max.)	11 mA
Insulation voltage endurance	1.000 V
Internal diameter	15,1 mm
Assembly distance to metal (min.)	5 mm
Housing material	Plastic (PA)
Material	POM (Ring)
Protection class	III, operation on protective low voltage
Operating principle	Static
Switching output	pnp, 200 mA, NO/NC, switchable
Voltage drop (max.)	2,0 V
Pulse stretching	10 … 150 ms adjustable
Resolution	Ø 2,0 mm
Sensitivity adjustment	Potentiometer
Speed of parts (max.)	35 m/s
Activation time	0,50 ms
Release time	10 ms
Ambient temperature during operation	-25 … +70 °C
Protection type	IP 67

© di-soric . Right to change reserved . 13.02.2021 . Page 1

di-soric GmbH & Co. KG . Steinbeisstraße 6 . DE-73660 Urbach . www.di-soric.com

202433
IR 15 PSOK-IBS
Inductive ring sensor

Technical data (typ.)	+20°C, 24 V DC
Connection	Connector, M12, 4-pin
Connection cable	VK …

More information / accessories	https://www.di-soric.com/202433

© di-soric . Right to change reserved