209974
OLK 71 P3-T4
Plastic fiber-optic amplifier

- Long range
- Easy to operate
- Two digital LED displays for the target value and actual value
- Teach-in / fine manual adjustment
- Time function / offset function
- Switch for light/dark switching

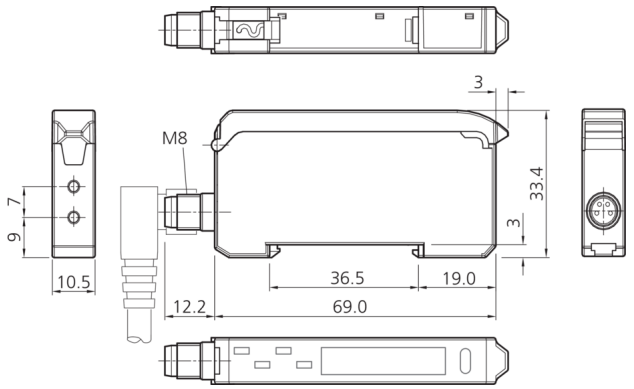

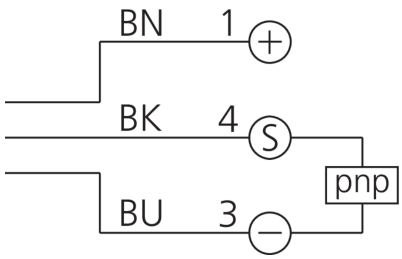

BK: black BN: brown BU: blue

Function

Technical data (typ.)	+20°C, 24 V DC
Service voltage	12 … 24 V DC (± 10%)
No-load current (max.)	40 mA
Insulation voltage endurance	1.000 V
Housing material	Plastic (ABS) / Plastic (PC)
Protection class	III, operation on protective low voltage
Amplifier for	2X2.2 mm plastic fiber optics
Evaluation	digital
Design	Cuboid design
Switching output	pnp, 100 mA, NO/NC, programmable
Light source	LED
Color	red
Wavelength	625 nm
Ambient light immunity	10 kLx
Operating elements	4
Sensitivity adjustment	Teach button
Display	Digital display
Switching frequency	1.000 Hz / 800 Hz / 600 Hz / 400 Hz / 200 Hz
Activation time	0,25 / 0,31 / 0,42 / 0,63 / 1,25 ms
Ambient temperature during operation	-10 … +55 °C
Protection type	IP 54
Connection	Connector, M8, 4-pin

More information / accessories	https://www.di-soric.com/209974

© di-soric . Right to change reserved . 13.02.2021 . Page 1 (1)